James Blake Associates Ltd

Arboricultural Impact Assessment

Long Lawford, Phase 4, Warwickshire

Instructed by

Bloor Homes South Midlands

3rd January 2018

JBA 17/099 AR01 Rev A.

Over 30 Years of Service, Value and Innovation

The Black Barn, Hall Road, Lavenham, Suffolk CO10 9QX
tel: **01787 248216** fax: **01787 247264** email: **jamesblake@jba-landmarc.com**
Chairman: James Blake BA (Hons) Dip LA (Hons) CMLI
Company Secretary: Louise Blake BSc PGCE
Directors: Elzbieta Zebrowska MSc Eng LArch MScEnvSc CMLI : John Wainwright BA (Hons) Dip LA CMLI
Kevin Slezacek DipArb MArborA
Associate Directors: Mary Power BSc MSc MCIEEM : Vivienne Jackson : Jenny Beck BA (Hons)

www.jba-landmarc.com

Registration no. 8169866 VAT no. 512 4127 91

JAMES BLAKE ASSOCIATES

Project	Long Lawford, Phase 4, Warwickshire
Report	Arboricultural Impact Assessment
Date	3rd January 2018
Author	Adam Dayman *FdSc Arboriculture, BSc Ecology, MArbor A*
Checked by	Kevin Slezacek DipArb. MArborA. MCIHort

CONTENTS PAGE

1 SUMMARY 4
2 INSTRUCTIONS 5
DOCUMENTS PROVIDED 5
3 OBSERVATIONS 6
SITE VISIT 6
SITE AND CONTEXT 6
4 TECHNICAL INFORMATION 7
STATUTORY PROTECTION 7
SOILS AND GEOLOGY 7
PLANNING POLICY 7
5 ARBORICULTURAL APPRAISAL 8
IDENTIFIED IMPACTS 8
TREE REMOVALS 8
TREE PROTECTION 9
REPLACEMENT PLANTING 9
6 CONCLUSIONS AND RECOMMENDATIONS 10
APPENDIX 1: TREE SURVEY SCHEDULE 11
APPENDIX 2: JBA DRAWINGS 12

1 SUMMARY

1.1 This Arboricultural Impact Assessment has been instructed by Bloor Homes South Midlands to accompany their reserved matters submission for residential development off Coventry Road, Long Lawford.

1.2 This report has been prepared in accordance with British Standard 5837: Trees in relation to design, demolition and construction – Recommendations (2012). This document provides best practice advice, assessment and guidance with regards to the design, planning and implementation of new developments.

1.3 This report concludes that the proposal is acceptable from an arboricultural perspective. Tree removals are predominantly limited to low value hedgerows or hedgerow trees. Some works within RPA's will require supervision and a single road will need non-standard construction methods however these are all recognised practices and details can be secured through the use of planning conditions.

2 INSTRUCTIONS

2.1 James Blake Associates have been instructed to carry out a survey of trees and significant vegetation within and directly adjoining land off of Coventry Road, Long Lawford in relation to the application for redevelopment of the site.

2.2 Our assessment was carried out in accordance with BS 5837:2012 'Trees in relation to design, demolition and construction - Recommendations'.

2.3 Details of all surveyed vegetation can be found within the Tree Survey Schedule at Appendix 1. All trees were visually inspected from ground level only and no diagnostic equipment or detailed decay investigation was carried out.

2.4 Our report is prepared to provide supporting evidence and justification for redevelopment in relation to the existing trees and vegetation within and neighbouring the site.

Documents provided

2.5 This report has been prepared with reference to the following documentation;

- Topographical survey by Urban Contours
- Proposed site layout – SMxxx SL001f (Site Layout)

3 OBSERVATIONS

Site visit

3.1 The site was visited by Adam Dayman on 12th December 2017 to identify, measure and locate trees and significant vegetation within and directly adjoining the site.

Site and context

3.2 The site consists of three grass fields used for grazing livestock. Separating the field parcels are two unmanaged hedgerows.

3.3 All tree cover was found throughout the boundaries of the site and the field parcels with the centre of the site being devoid of any tree cover. The trees found on site were typical for the setting and presented low to moderate value.

3.4 The majority of the trees on site were formed tree groups or outgrown hedgerows and provided a buffer between the site and the surrounding area.

Figure 1: Showing approximate site boundary and site in relation to its surroundings

4 TECHNICAL INFORMATION

Statutory protection

4.1 The site does not appear to be within a conservation area but this has not been confirmed. We are aware of a Tree preservation order affecting one group of trees across the northern boundary these are referred to as G13 within this report.

Soils and Geology

4.2 This information is obtained from The British Geological Survey (online) 'Geology of Britain Viewer' but is provided only as a guideline to assist with assessment of site conditions in relation to rooting habits of trees.

4.3 Soil conditions have the potential to affect tree growth, rooting depth and extent, species selection and foundation design and therefore a detailed soil assessment should be carried out by a competent person.

4.4 Bedrock geology is described as being Rugby Limestone – Mudstone and Limestone. Superficial deposits are shown as being Bosworth Clay – Clay and Silt.

Planning policy

4.5 The National Planning Policy Framework set out the government's planning policies for England and how these should be applied. The document replaces all previous documents and came into action in March 2012.

4.6 The NPPF supports and promotes sustainable development, which it defines as having three dimensions; social, economic and environmental. It goes on to state that these three dimensions are mutually dependent and to achieve sustainable development they must be sought simultaneously.

4.7 Specifically the NPPF states that "planning permission should be refused for development resulting in the loss or deterioration of irreplaceable habitats, including ancient woodland and the loss of aged or veteran trees found outside ancient woodland. Unless the need for, and benefits of, the development in that location clearly outweigh the loss".

5 ARBORICULTURAL APPRAISAL

5.1 The location, root protection area, crown spread and BS5837 categorisation is shown on the appended tree survey drawing at Appendix 2. Dimensions, comments and information gathered for each survey entry is provided in the tree schedule at Appendix 1.

5.2 Of the twenty eight survey entries, sixteen were assessed as being semi mature, nine were early mature and three were mature.

5.3 The survey assessed the tree population as consisting of over two thirds low quality trees. Of the twenty eight survey entries, seven were considered to be of moderate quality and value (B category). 20 were deemed to be of low quality and value (C category) and 1 was considered to be poor quality (U category).

Identified impacts

5.4 Tree Removal Plan ref. JBA 17/099 TPP01 at Appendix 2 shows the proposed layout and tree removals necessary to implement the proposed development.

5.5 The arboricultural impacts have been assessed and are deemed to be acceptable. In respect of the proposal the following have been identified as being of most significance;

- Tree removals
- Tree protection requirements

Tree removals

5.6 In order to implement the proposal it will be necessary to remove one tree of moderate quality and value (T1), four trees (T15, T16, T19 & T27), sections of (G4, All of G14 & G21), sections of (H6, H26 & H28) of low quality and value and one shrub group that is suitable for retention (S9).

5.7 T1 a mature Ash reached a height of up to fifteen metres and was found along the south east boundary of the site. The tree presented typical features for its age and form such as minor deadwood and branch stubs. But overall the tree had overall good vitality and vigour. This tree will require removal to accommodate the site access.

5.8 Sections of low quality hedgerows and tree groups will be required for linking footpaths and roads. The hedgerows and groups across the site were seen to be of low quality and value therefore there removal will not cause any significant negative impacts to the site from an arboricultural perspective.

Tree Protection

5.9 Tree Protection Plan ref. JBA 17/099 TPP01 at Appendix 2 shows the position and extent of tree protection that will be required during construction.

5.10 Trees T5 and T18 will require special consideration as there are proposed works encroaching into the trees RPA's. These works can be completed and the tree protected by adopting no dig construction. This will make it possible to install the roads in the RPA's of these trees without causing damage to their root system. As a result of this the levels will be altered to accommodate the no dig construction. If no dig construction is not possible in this area then the layout should seek to accommodate these trees RPA's.

5.11 Works are also required within T2 and G13's RPA which will be suitably mitigated by an arboricultural consultant overseeing the works. Works can be overseen by an arboricultural consultant to ensure that the trees are protected throughout the construction of the site.

5.12 There will be some excavations required for the construction of the attenuation basins around T22; however this tree is located within an old ditch line and is surrounded by farm land therefore it is reasonable to assume that as a result of site and soil conditions its root system would have developed at depth, typically between 1-2m. Based upon this supervised excavations are deemed to be acceptable and should any significant roots be encountered the shape of the basin adjusted to avoid these. This tree will be a prominent feature of the site and supervised works will ensure no damage occurs.

5.13 Tree protection fencing will consist of robust fencing secured to a solid framework as recommended within BS5837 2012.

Replacement planting

5.14 The proposal offers adequate space for the retention of higher quality trees whilst offering areas for new planting to enhance and restock the garden. New structured tree planting will suitably mitigate for the losses of trees on site.

6 CONCLUSIONS AND RECOMMENDATIONS

6.1 The constraints that existing trees and vegetation pose to development have been assessed in accordance with BS5837: 2012 and through ongoing liaison between the design team and James Blake Associates.

6.2 All trees and vegetation to be removed are predominantly of low quality and value with the exception of T1 which was moderate value. The majority of the higher quality trees will be incorporated into the design so there will be minimal impacts from an arboricultural perspective.

6.3 Encroachment into root protection zones has been limited on site to ensure the trees have minimal impact as a result of the development. Where this is required there are suitable methods recommended and if these are conducted efficiently then this will result in the trees adequate protection and retention.

6.4 Development provides the opportunity to undertake management which some of the trees across the site would benefit from. Managing trees provides the opportunity to increase the trees amenity value and longevity.

6.5 Replacement planting will ensure that a thriving tree stock will be present on site for the foreseeable future.

6.6 I recommend the proposal is approved subject to a planning condition requiring a detailed arboricultural method statement and tree protection plans.

APPENDIX 1: TREE SURVEY SCHEDULE

Tree Survey Schedule - Key

Life Stage	Description
NP	Newly planted
Y (Young)	An establishing tree that could be easily transplanted.
SM (Semi Mature)	An established tree still to reach its ultimate height and spread and with considerable growth potential.
EM (Early Mature)	A tree reaching its ultimate height and whose growth is slowing however it will still increase considerably in stem diameter and crown spread.
M (Mature)	A tree with limited potential for further significant increase in size although likely to have a considerable safe useful life expectancy.
OM (Over Mature)	A senescent or moribund tree with a limited useful life expectancy.
V (Veteran)	A tree older than typical for the species and of great ecological, cultural or aesthetic value.

Abbreviations	Description
Stem Ø (mm) at 1.5m	Diameter of stem in millimetres at 1.5m above ground level for single-stemmed trees or in accordance with Annex C of BS 5837 for multi-stemmed trees or trees with low forks or irregular stems.
Stems	Numbers of stems or M/S = Multi-Stemmed.
Height of (FSB)	Height of First Significant Branch above ground level.
Crown Spread **NSEW**	Crown spread at the four points, North, South, East and West.
Condition	Condition of the tree observed at the time of surveying G = Good; F = Fair; P = Poor; D = dead

Abbreviations	Description
Est Remaining Contribution (Years)	Estimated Remaining Contribution in Years (<10, 10+, 20+, 40+)

BS Category	Description
A	High quality and value (non-fiscal) with at least 40 years remaining life expectancy.
B	Moderate quality and value with at least 20 years remaining life expectancy.
C	Low quality and value with at least 10 years remaining life expectancy, or young trees with a stem diameter below 150 mm.
U	Unsuitable for retention. The existing condition is such that the tree/ trees cannot be realistically retained as in the context of the current land use for longer than 10 years. Note, category U trees can have existing or potential conservation value which it might be desirable to preserve.
Radii Single Stem (m)	Root Protection Radius in metres based on stem diameter.
RPA	Root Protection Area. A layout design tool indicating the minimum area surrounding the tree that contains sufficient rooting volume to maintain the tree's viability, and where the protection of the roots and soil structure is treated as a priority. Assessed according to the recommendations set out in clause 4.6 of BS 5837. It is calculated by multiplying the radius squared by 3.142. Clause 4.6.2 of BS 5837 states that the RPA may be changed in shape, taking into account local site factors, species tolerance, condition and root morphology.

The Black Barn, Hall Road, Lavenham, Suffolk CO10 9QX
tel: **01787 248216** fax: **01787 247264** email: **jamesblake@jba-landmarc.com**
Chairman: James Blake BA (Hons) Dip LA (Hons) CMLI
Company Secretary: Louise Blake BSc PGCE
Directors: Elzbieta Zebrowska MSc Eng LArch MScEnvSc CMLI : John Wainwright BA (Hons) Dip LA CMLI
Kevin Slezacek DipArb MArborA
Associate Directors: Mary Power BSc MSc MCIEEM : Vivienne Jackson : Jenny Beck BA (Hons)

www.jba-landmarc.com

Registration no. 8169866 VAT no. 512 4127 91

BS Category	Total
Category A	0
Category B	7
Category C	20
Category U	1

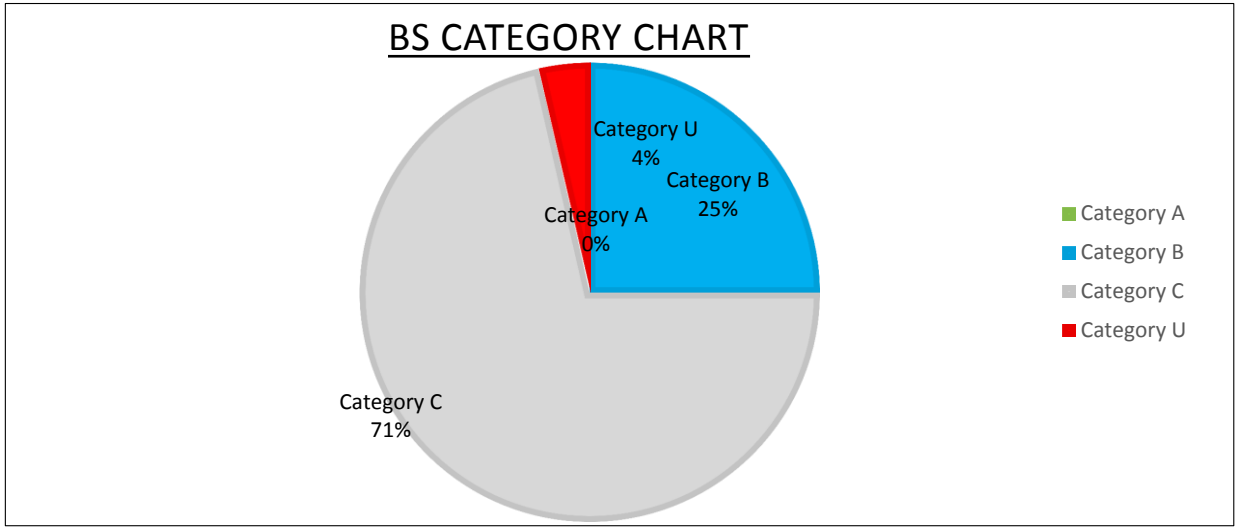

Age Class	Total
Newly Planted	0
Young	0
Semi Mature	16
Early Mature	9
Mature	3
Over Mature	0
Veteran	0
	28

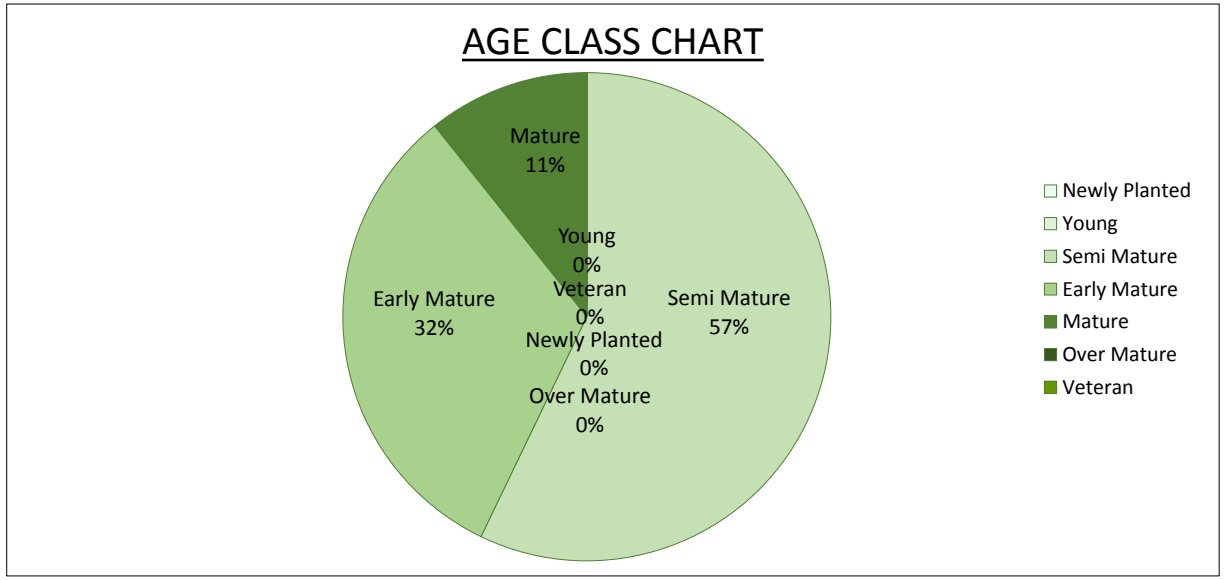

The Black Barn, Hall Road, Lavenham, Suffolk CO10 9QX
tel: **01787 248216** fax: **01787 247264** email: **jamesblake@jba-landmarc.com**
Chairman: James Blake BA (Hons) Dip LA (Hons) CMLI
Company Secretary: Louise Blake BSc PGCE
Directors: Elzbieta Zebrowska MSc Eng LArch MScEnvSc CMLI : John Wainwright BA (Hons) Dip LA CMLI
Kevin Slezacek DipArb MArborA
Associate Directors: Mary Power BSc MSc MCIEEM : Vivienne Jackson : Jenny Beck BA (Hons)

www.jba-landmarc.com

Registration no. 8169866 VAT no. 512 4127 91

Tree Survey Schedule

Site name: Long Lawford Phase 4
Client: Bloor Homes South Midlands
Job Number: 17-099

Survey Date: 12th December 2017
Surveyor: Adam Dayman

Tree No.	Tree Species	Life Stage	Stem Ø (mm) at 1.5m	Height (m)	Height of (FSB)	Crown Spread				Condition	Comments	Tree Management Recommendations	Est Remaining Contribution (Years)	BS Cat	Radii Single Stem (m)	RPA (m)
						N	E	S	W							
T1	Ash (Fraxinus excelsior).	M	800	15	5	8	8	8	8	Fair	Minor deadwood observed. Branch tearout visible. Branch stubs. Branch socket cavities. Good vitality and vigour. Light ivy coverage on main stem.		20+	B1,B2	9.6	290
T2	English Oak (Quercus robur).	EM	750	10	4	5	5	5	5	Fair	Typical crown form with no obvious major defects. Minor deadwood observed. Dense undergrowth at base. Dense ivy on main stem.		20+	B2	9.0	255
T3	Ash (Fraxinus excelsior).	EM	405	7	1	4	4	4	4	Fair	Typical crown form with no obvious major defects. Minor deadwood observed. Co dominant from base.		10+	C1	4.9	74
G4	Hawthorn (Crataegus monogyna). Blackthorn (Prunus spinosa).	SM	150	5	1	2	2	2	2	Poor	Unmaintained hedgerow. Dense bramble throughout.outgrown remaining hedgerow clumps		<10	C1	1.8	10
T5	English Oak (Quercus robur).	M	1010	10	4.5	4.5	4.5	4.5	4.5	Fair	Minor deadwood observed. Branch tearout visible. Branch stubs. Good vitality and vigour.lapsed pollard with sign of tearout on top of main stem which is presenting an ecological habitat feature.		40+	B1,B2,B3	12.1	462
H6	Ash (Fraxinus excelsior). Hawthorn (Crataegus monogyna). Elder (Sambucus nigra).	SM	150	2.5	1	1	1	1	1	Fair	Maintained hedgerow. Dense bramble throughout. Dense undergrowth at base.		20+	C2	1.8	10
T7	Ash (Fraxinus excelsior).	EM	700	14	5	6.5	6.5	8	6.5	Fair	Typical crown form with no obvious major defects. Minor deadwood observed. Dense undergrowth at base. Dense ivy on main stem. Situated offsite.		20+	C2	8.4	222
T8	Ash (Fraxinus excelsior).	EM	650	12	4	4	5	4	4	Poor	Branch stubs. Dense undergrowth at base. Light ivy coverage on main stem. Situated offsite.poor pruning has lead to the tree having a poor with limited amenity value.		10+	C1	7.8	191

The Black Barn, Hall Road, Lavenham, Suffolk CO10 9QX
tel: **01787 248216** fax: **01787 247264** email: **jamesblake@jba-landmarc.com**
Chairman: James Blake BA (Hons) Dip LA (Hons) CMLI
Company Secretary: Louise Blake BSc PGCE
Directors: Elzbieta Zebrowska MSc Eng LArch MScEnvSc CMLI : John Wainwright BA (Hons) Dip LA CMLI
Kevin Slezacek DipArb MArborA
Associate Directors: Mary Power BSc MSc MCIEEM : Vivienne Jackson : Jenny Beck BA (Hons)

www.jba-landmarc.com

Registration no. 8169866 VAT no. 512 4127 91

Tree No.	Tree Species	Life Stage	Stem Ø (mm) at 1.5m	Height (m)	Height of (FSB)	Crown Spread				Condition	Comments	Tree Management Recommendations	Est Remaining Contribution (Years)	BS Cat	Radii Single Stem (m)	RPA (m)
						N	E	S	W							
S9	Hawthorn (Crataegus monogyna).	SM	100	2	1	0.5	0.5	0.5	0.5	Poor	shrub clumb dominated by bramble and wild rose		<10	U	1.2	5
T10	Hawthorn (Crataegus monogyna).	SM	300	6	1	3.5	3.5	3.5	3.5	Poor	Not identified on the topographical survey. Minor deadwood observed. Crossing and rubbing branches. Dense undergrowth at base. Dense ivy on main stem. Dense bramble throughout. Situated offsite.		10+	C1	3.6	41
T11	Hawthorn (Crataegus monogyna).	SM	283	5	1.5	1	2	2	2	Fair	Typical crown form with no obvious major defects. Situated offsite. Tree situated on boundary line.		10+	C1	3.4	36
G12	Ash (Fraxinus excelsior).	SM	495	9	4	4	4	4	4	Fair	Typical crown form with no obvious major defects. Minor deadwood observed. Co dominant from base.		10+	C2	5.9	111
G13	Ash (Fraxinus excelsior).	EM	779	12	4	6	6	6	6	Good	Multi stemmed from base. Open even crown. Buffer group between site and surrounding area. Interlocking crowns. Linear tree group.		20+	B1,B2,B3	9.4	275
G14	Ash (Fraxinus excelsior). Hawthorn (Crataegus monogyna). Blackthorn (Prunus spinosa). Elder (Sambucus nigra).	SM	200	5	1	2	2	2	2	Fair	Buffer group between site and surrounding area. Dense undergrowth. Interlocking crowns. Linear tree group. Unmaintained hedgerow.outgrown hedgerow		10+	C2	2.4	18
T15	Ash (Fraxinus excelsior).	SM	354	8	4	2.5	2.5	2.5	2.5	Fair	Typical crown form with no obvious major defects. Minor deadwood observed. Dense undergrowth at base. Light ivy coverage on main stem.		20+	C2	4.3	57
T16	Ash (Fraxinus excelsior).	SM	250	8	4	2.5	2.5	2.5	2.5	Fair	Typical crown form with no obvious major defects. Minor deadwood observed. Dense undergrowth at base. Light ivy coverage on main stem.		20+	C2	3.0	28
T17	Ash (Fraxinus excelsior).	EM	460	9	5	4	4	4	4	Fair	Typical crown form with no obvious major defects. Major deadwood observed. Dense undergrowth at base. Light ivy coverage on main stem.		10+	C1,C2	5.5	96
T18	Ash (Fraxinus excelsior).	EM	651	11	5	5	5	5	5	Good	Typical crown form with no obvious major defects. Dense undergrowth at base. Multi stemmed from base.formely coppiced		20+	C1,C2	7.8	192

The Black Barn, Hall Road, Lavenham, Suffolk CO10 9QX
tel: **01787 248216** fax: **01787 247264** email: **jamesblake@jba-landmarc.com**
Chairman: James Blake BA (Hons) Dip LA (Hons) CMLI
Company Secretary: Louise Blake BSc PGCE
Directors: Elzbieta Zebrowska MSc Eng LArch MScEnvSc CMLI : John Wainwright BA (Hons) Dip LA CMLI
Kevin Slezacek DipArb MArborA
Associate Directors: Mary Power BSc MSc MCIEEM : Vivienne Jackson : Jenny Beck BA (Hons)

www.jba-landmarc.com

Registration no. 8169866 VAT no. 512 4127 91

Tree No.	Tree Species	Life Stage	Stem Ø (mm) at 1.5m	Height (m)	Height of (FSB)	Crown Spread				Condition	Comments	Tree Management Recommendations	Est Remaining Contribution (Years)	BS Cat	Radii Single Stem (m)	RPA (m)
						N	E	S	W							
T19	Ash (Fraxinus excelsior).	SM	380	9	4.5	3.5	3.5	3.5	3.5	Fair	Typical crown form with no obvious major defects. Minor deadwood observed. Branch stubs. Dense undergrowth at base.		10+	C2	4.6	65
T20	Ash (Fraxinus excelsior).	EM	550	12	4	5	5	6.5	6.5	Fair	Typical crown form with no obvious major defects. Minor deadwood observed. Branch stubs. Dense undergrowth at base. Good vitality and vigour.		20+	B1,B2	6.6	137
G21	Ash (Fraxinus excelsior). Hawthorn (Crataegus monogyna). Blackthorn (Prunus spinosa).	SM	212	5	1	2	2	2	2	Poor	Unmaintained hedgerow. Dense bramble throughout. Field boundary hedgerow. Dense undergrowth at base.		10+	C2	2.5	20
T22	English Oak (Quercus robur).	M	1090	11	3	7	7	7	7	Fair	Major deadwood observed. Branch tearout visible. Branch stubs. Branch socket cavities. Broken branches in crown. Open even crown.multiple hollow limbs and branch cavities which are providing good habitat features.		40+	B1,B2,B3	13.1	538
G23	Ash (Fraxinus excelsior). Goat Willow (Salix caprea).	SM	230	7	2	2.5	2.5	2.5	2.5	Fair	Typical crown form with no obvious major defects. Minor deadwood observed. Tree situated on boundary line.		10+	C2	2.8	24
T24	Ash (Fraxinus excelsior).	SM	270	10	5	3.5	3.5	3.5	3.5	Fair	Typical crown form with no obvious major defects. Minor deadwood observed. Dense undergrowth at base. Tree situated on boundary line.		10+	C2	3.2	33
T25	English Oak (Quercus robur).	EM	490	11	4	6.5	6.5	6.5	6.5	Good	Major deadwood observed. Branch tearout visible. Branch stubs. Dense undergrowth at base. Good vitality and vigour.good shape and high amenity value		40+	B1,B2	5.9	109
H26	Ash (Fraxinus excelsior). Hawthorn (Crataegus monogyna). Blackthorn (Prunus spinosa). English Elm (Ulmus procera).	SM	150	6	1	2	2	2	2	Fair	Maintained hedgerow. Dense bramble throughout. Dead elms observed. Field boundary hedgerow. Dense undergrowth at base.		10+	C2	1.8	10
T27	Ash (Fraxinus excelsior).	SM	424	8	4	3.5	3.5	3.5	3.5	Fair	Typical crown form with no obvious major defects. Minor deadwood observed. Co dominant from base. Situated offsite.		10+	C2	5.1	81
H28	Hawthorn (Crataegus monogyna). Blackthorn (Prunus spinosa). English Elm (Ulmus procera).	SM	150	3.5	1	1	1	1	1	Fair	Maintained hedgerow. Dense bramble throughout. Field boundary hedgerow. Dense undergrowth at base.		10+	C2	1.8	10

The Black Barn, Hall Road, Lavenham, Suffolk CO10 9QX
tel: **01787 248216** fax: **01787 247264** email: **jamesblake@jba-landmarc.com**
Chairman: James Blake BA (Hons) Dip LA (Hons) CMLI
Company Secretary: Louise Blake BSc PGCE
Directors: Elzbieta Zebrowska MSc Eng LArch MScEnvSc CMLI : John Wainwright BA (Hons) Dip LA CMLI
Kevin Slezacek DipArb MArborA
Associate Directors: Mary Power BSc MSc MCIEEM : Vivienne Jackson : Jenny Beck BA (Hons)

www.jba-landmarc.com

Registration no. 8169866 VAT no. 512 4127 91

APPENDIX 2: JBA DRAWINGS

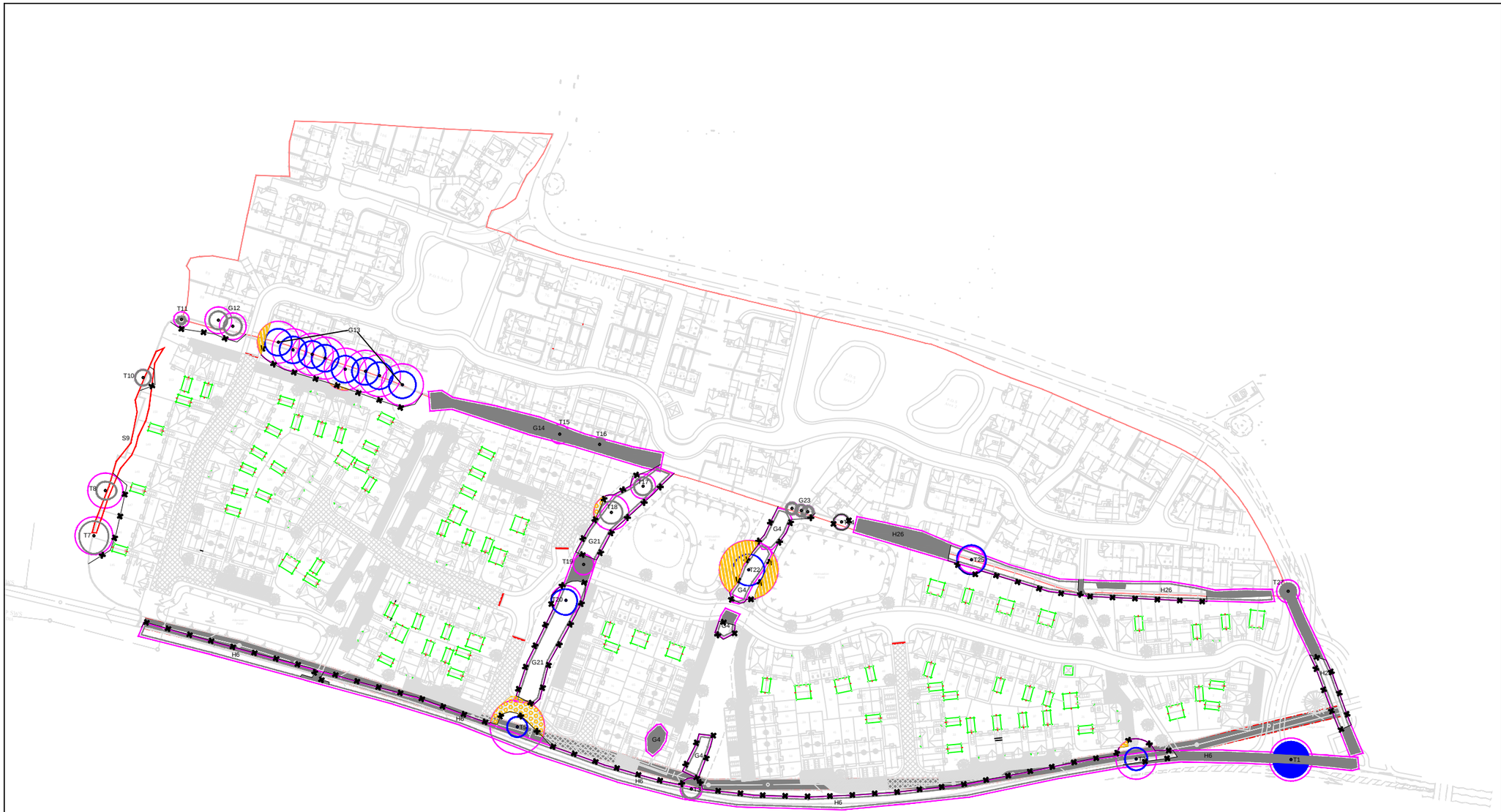

KEY

T1	Category A - Tree of high quality and value.
T1	Category B - Tree of moderate quality and value.
T1	Category C - Tree of low quality and value.
T1	Category U - Tree in irreversible decline or dead.
H1 G1	Existing hedge or group. Colour coded as above in accordence with BS 5837 to be removed.
T1	Category A - Tree of high quality and value to be removed.
T1	Category B - Tree of moderate quality and value to be removed.
T1	Category C - Tree of low quality and value to be removed.
T1	Category U - Tree in irreversible decline or dead to be removed.
H1 G1	Existing hedge or group. Colour coded as above in accordence with BS 5837 to be removed.
	Root Protection Area as calculated in accordance with BS 5837:2012.
	Approximate line of protective fencing to be erected in accordance with BS 5837.
	Area of Temporary Ground Protection.
	Area of No Dig Construction or specialist construction methods.
	Area of works to be overseen by arboricultural consultant.
	Red Line Boundary

Figure 3 Examples of above-ground stabilizing systems

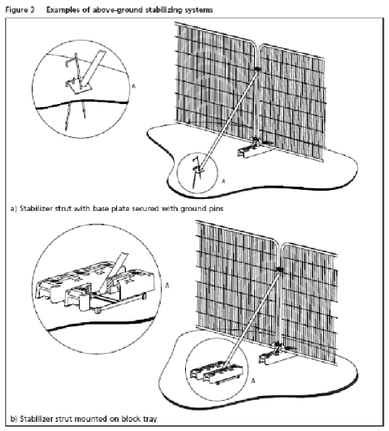

a) Stabilizer strut with base plate secured with ground pins

b) Stabilizer strut mounted on block tray

Figure 2 Default specification for protective barrier

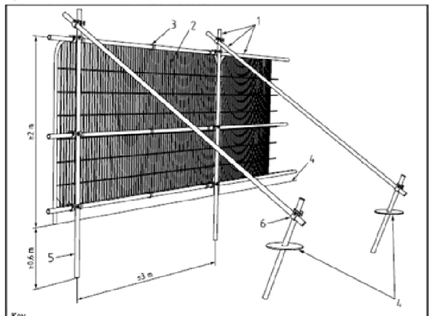

Key

1 Standard scaffold poles
2 Heavy gauge 2 m tall galvanized tube and welded mesh infill panels
3 Panels secured to uprights and cross-members with wire ties
4 Ground level
5 Uprights driven into the ground until secure (minimum depth 0.6 m)
6 Standard scaffold clamps

REV.	DATE	INITIALS	DETAILS

CLIENT Bloor Homes South Midlands	DWG. TITLE Tree Protection Plan
SITE Long Lawford Phase 4	
PURPOSE OF ISSUE Tree Protection Plan	

DRG BY	CHECKED	AUTH'D	SCALE	DATE	DWG NO.	REV.
AD	JBA	JBA	1:2000@A3	20/12/2017	JBA 17-099 TPP01	

GENERAL NOTES

-ALL DIMENSIONS IN MILLIMETRES
-DO NOT SCALE OFF THIS DRAWING
-ALL DIMENSIONS TO BE CHECKED ON SITE

(C)JAMES BLAKE ASSOCIATES LTD 2017

JAMES BLAKE
The Black Barn, Hall Road, Lavenham, Suffolk, CO10 9QX
Tel: (01787) 248216 Fax: (01787) 247264
jamesblake@ba-landmarc.com www.jba-landmarc.com
LANDSCAPE ARCHITECTURE o ARBORICULTURE o ECOLOGY

Adam Dayman - 26/05/2015 - K:\JBA\Client Projects\Bloor Homes South Midlands\Warwickshire Long Lawford Ph 4 17-099\Drawings\JBA\Master\JBA 17-099 Tree Protection Plan, Long Lawford Phase 4.dwg